COOLING SYSTEM

86U03X-501

OUTLINE

OUTLINE OF CONSTRUCTION

The new F2 engine employs a cooling system that is basically the same as that of the FE engine.

1. The electric fan system of the new 626 is based on the equippent of the vehicle for the most efficient cooling.
2. In conjunction with the change of the timing belt layout, the shape and position of the water pump is changed.

COOLANT FLOW CHART

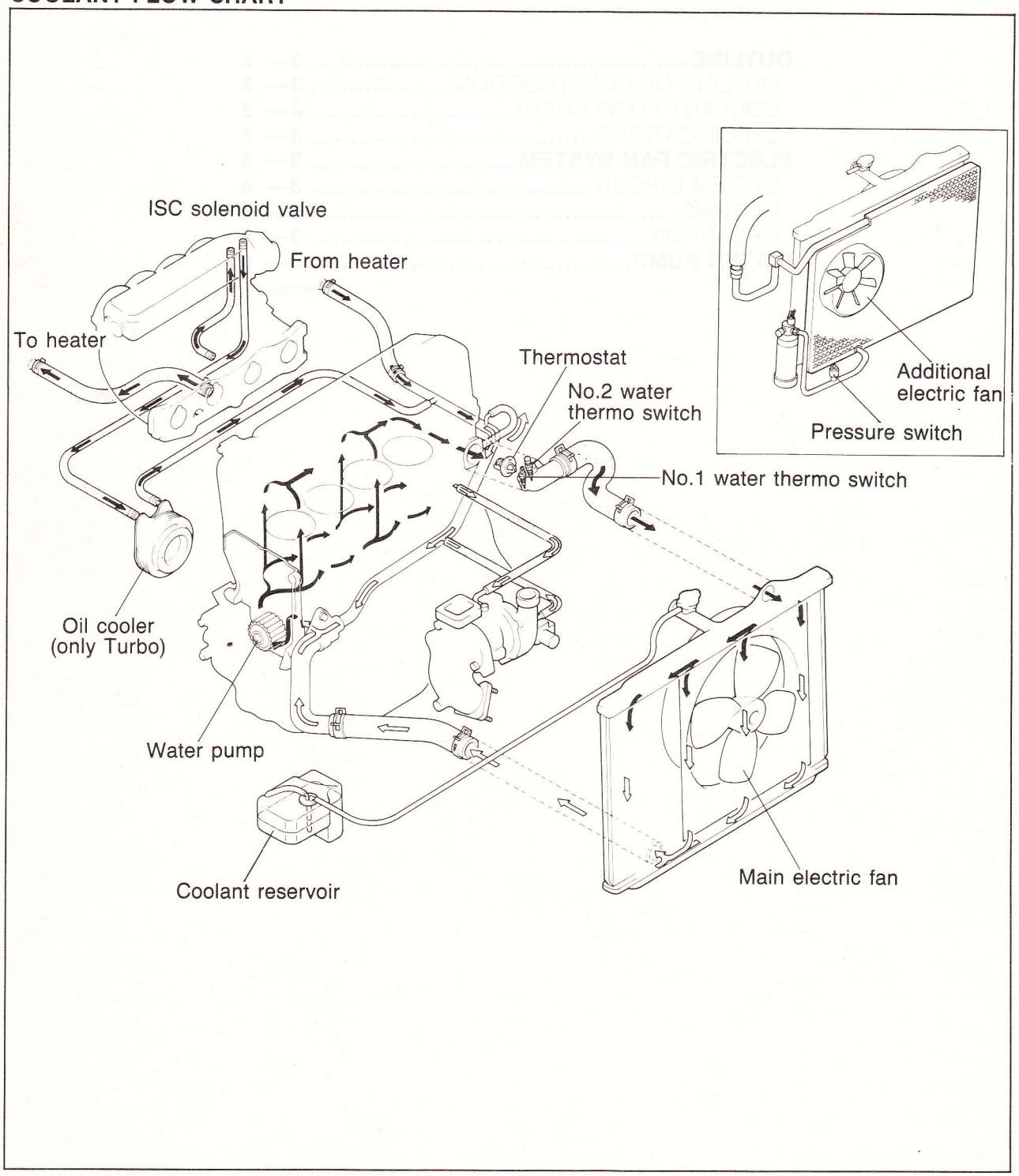

86U03X-502

SPECIFICATIONS

Item \ Model			F2		FE	
			Turbo	Non-Turbo	Turbo	Non-Turbo
Cooling method			Water cooled, forced circulation			
Coolant capacity liters (US qt, Imp qt)	With heater		7.5 (7.9, 6.6)			
	Without heater		6.9 (7.3, 6.1)			
Water pump	Type		Centrifugal, timing belt driven			
	Water seal type		One-piece seal		Two-piece seal	
Thermostat	Type		Wax			
	Opening temp. °C(°F)		88 (190)			
	Full open temp. °C(°F)		100 (212)			
	Full open lift mm (in)		8.5 (0.33) or more			
Radiator	Type		Corrugated			
	Cap valve operating pressure kPa (kg/cm^2, psi)		74—103 (0.75—1.05, 10.7—14.9)			
Cooling fan	Type		Electric			
	Capacity w	MTX	80	80	80	80
		ATX	160	120	—	120
	Number of blades		4			
	Outer diameter mm (in)	MTX	320 (12.6)		300 (11.8)	
		ATX	340 (13.4)			

86U03X-503

ELECTRIC FAN SYSTEM

SYSTEM CIRCUIT

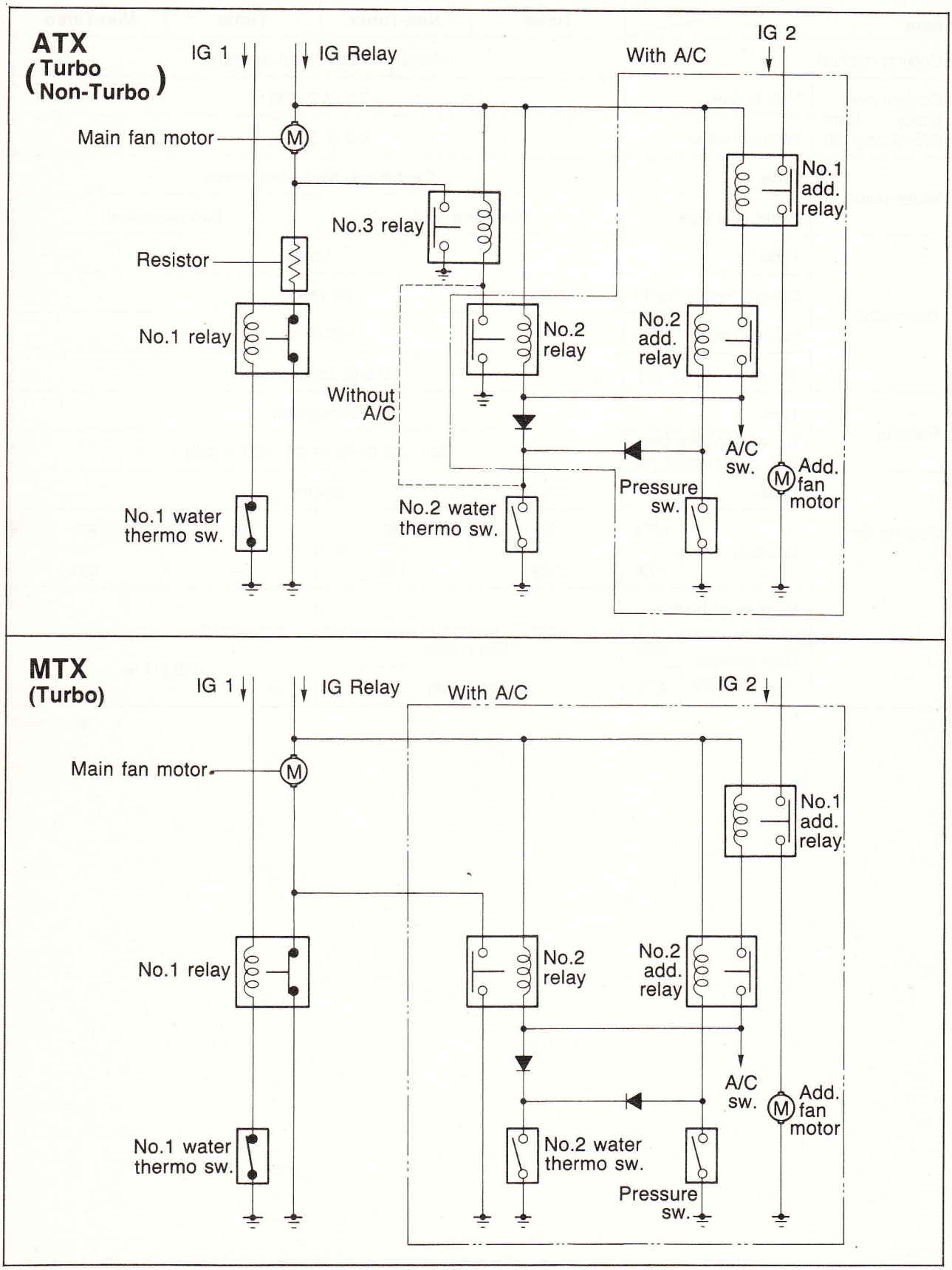

OUTLINE

The electric fan system of the new 626 is based on the equipment of the vehicle for the most efficient cooling.

1. ATX models use a high-torque, 2-speed main electric fan motor.
2. A/C equipped models use an additional electric fan.
3. ATX Turbo models use a higher torque main motor to reduce the extra heat generated by the turbocharger.
4. Non-Turbo MTX vehicles have the same system as the previous 626.

OPERATION

Main Electric Fan

1. ATX models have a 2-speed main fan control for improved cooling efficiency and reduced noise.
2. ATX models have a higher torque main fan motor than MTX models.
3. ATX Turbo models have steeper pitch main fan blades than ATX Non-Turbo models.

Capacity (W)			Operation	Speed (rpm)		
ATX	Turbo:	160	No.1 water thermo sw.—OFF =Coolant temp. over 97°C (177°F).	Lo	Turbo	: 1,600
	Non-Turbo:	120			Non-Turbo	: 1,750
			1. No.2 water thermo sw.—ON =Coolant temp. over 108°C (226°F). 2. A/C sw.—ON	Hi	Turbo	: 2,050
					Non-Turbo	: 2,080
MTX	Turbo Non-Turbo	:80	1. No.1 water thermo sw.—ON =Coolant temp. over 97°C (177°F) 2. A/C sw.—ON	Turbo Non-Turbo		: 2,100

Additional Electric Fan

1. A/C equipped models have an aditional cooling fan for increased cooling.
2. The additional fan operates if engine temperature is excessive or if the A/C refrigerant pressure is high. It is controlled by the No.2 water thermo switch and the A/C pressure switch.
3. The aditional fan motor is a high-torque motor to ensure reliable operation and effective cooling.

Capacity	Operation	Speed
120W	1. No.2 water thermo sw.—ON = Coolant temp. over 108°C (226°F). 2. Pressure sw.—ON = Refrigerant pressure over 1,470 kN (15 kg/cm^2, 213 psi).	2,100 rpm

Operation Chart — Condition and Operating Fan

Condition	Operating fan				
	With A/C			Without A/C	
	ATX	MTX		ATX	MTX
		Turbo	Non-Turbo		
Coolant temp. is over 97°C (177°F)	Main (Lo)	Main	Main	Main (Lo)	Main
Coolant temp. over 108°C (226°F)	Main (Hi), Additional	Main, Additional	—	Main (Hi)	—
A/C sw. ON	Main (Hi)	Main	Main, Condensor fan	—	
Pressure sw. ON	Main (Hi), Additional	Main, Additional	—		

WATER PUMP

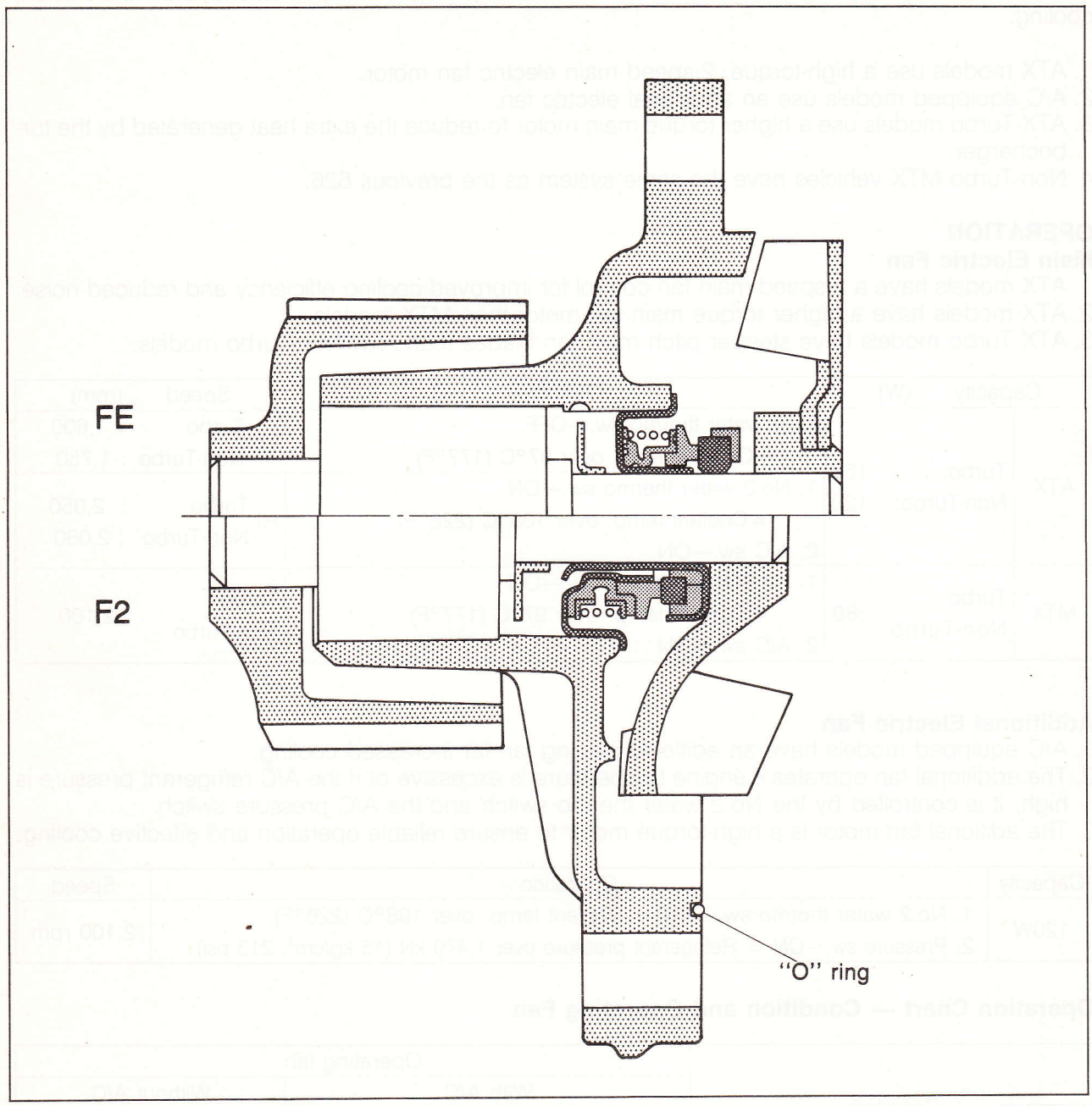

86U03X-504

1. In conjunction with the change of the timing belt layout, the shape and position of the water pump is changed.
   An O-ring is used for mounting the water pump instead of a gasket. When installing the water pump, thoroughly remove all dirt and oil from the mounting surface of the cylinder block and water pump. Use a new O-ring.
2. The water pump shaft seal is changed from a two-piece seal to a one-piece seal for improved sealing.
3. The water pump is not repairable. If any problem is found, replace it as a unit.